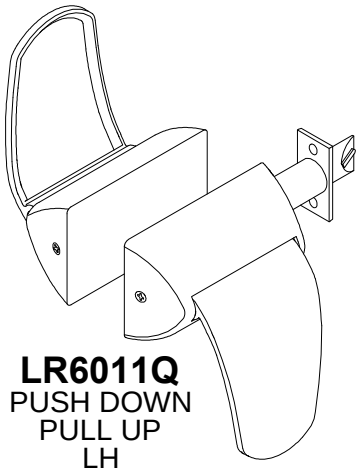

LR6011Q
PUSH DOWN
PULL UP
LH

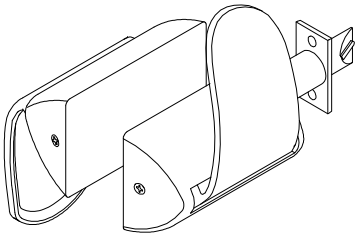

LR6012Q
PUSH UP
PULL DOWN
LH

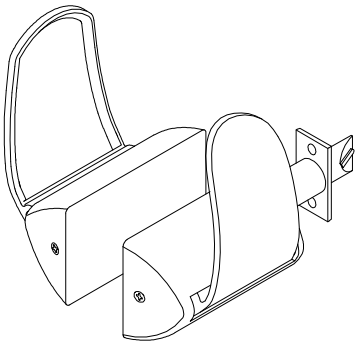

LR6013Q
PUSH UP
PULL UP
LH

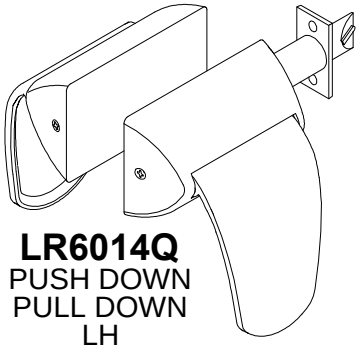

LR6014Q
PUSH DOWN
PULL DOWN
LH

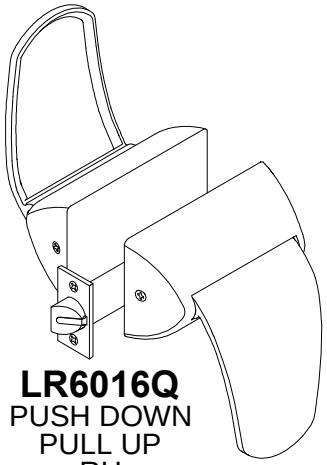

LR6016Q
PUSH DOWN
PULL UP
RH

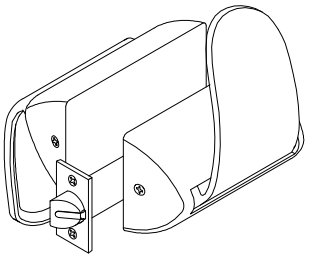

LR6017Q
PUSH UP
PULL DOWN
RH

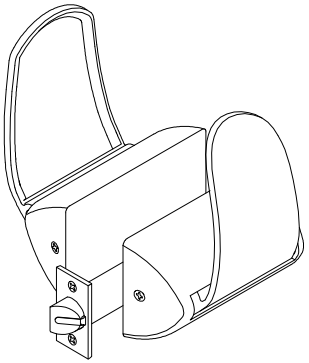

LR6018Q
PUSH UP
PULL UP
RH

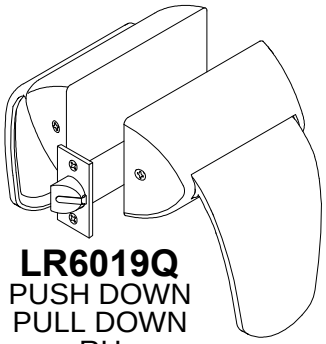

LR6019Q
PUSH DOWN
PULL DOWN
RH

LR6000Q HANDLE & COVER CONFIGURATION-00.DWG