CUSTOM SDSM4500 DOUBLE-LIPPED STRIKE

- **1-3/4" THICK DOOR**
- **CENTER HUNG DOOR**
- **SCHLAGE MORTISE LOCK W / DEAD BOLT**
- **5-1/8" FRAME**

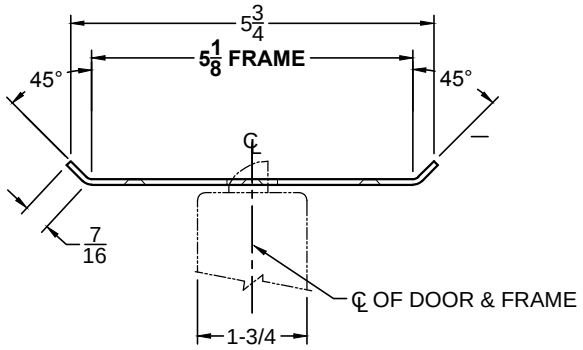

TOP VIEW

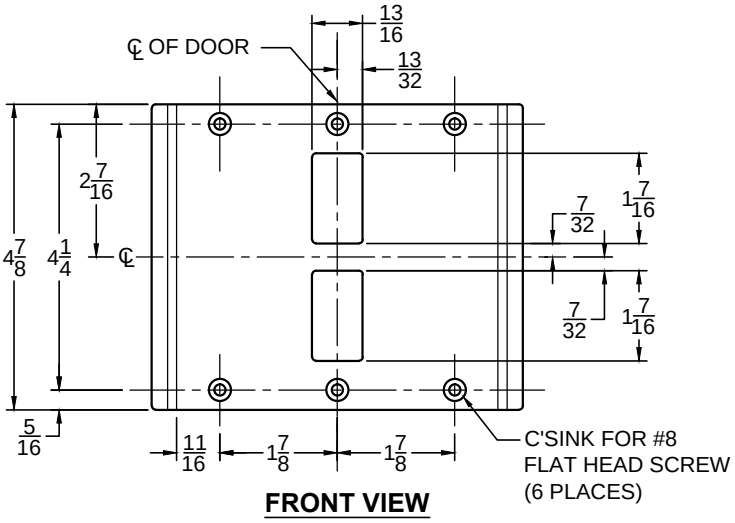

FRONT VIEW

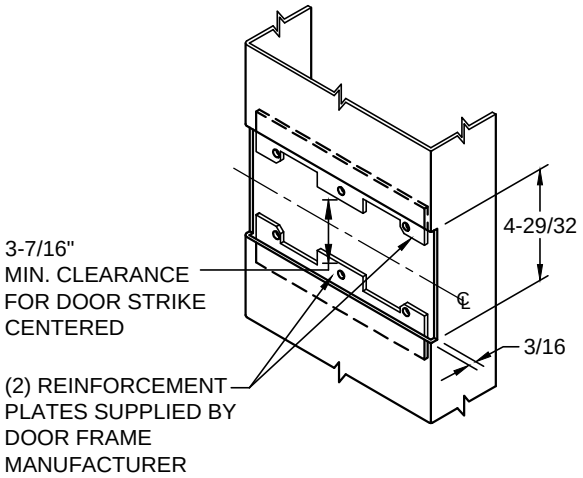

CUT-OUT FOR METAL JAMB

NOTE:

1. HORIZONTAL CENTERLINE OF PLATE TO MATCH HORIZONTAL CENTERLINE OF CUTOUT.
2. SCREWS- 8-32 X 3/8" UNDERCUT F.H.M.S.
3. R.H. DOOR SHOWN, L.H. OPPOSITE (STRIKE IS NON HANDED)
4. DO NOT SCALE DRAWING.
5. FOR CUSTOM DOUBLE - LIPPED STRIKE CONSULT FACTORY.

REINFORCEMENT:

WHEN INSTALLING IN METAL FRAME, REINFORCEMENT IS **NEEDED** WITH THIS PRODUCT, CUSTOMER OR MANUFACTURER TO SUPPLY FRAME REINFORCEMENT WITH LATCH BOLT CLEARANCE.

SP-DS4650 5.125 x 4.875 SCHLAGE .DWG

® www.abhmfg.com
E-mail: abhinfo@abhmfg.com
Architectural Builders Hardware Mfg., Inc.
1222 Ardmore Ave., Itasca, IL 60143
630.875.9900; FAX 800.9FAXABH (932.9224)

© 2016 ABH Mfg., Inc.
printed in USA

SP-DS4650

ISSUED 12-30-16