1857 MANUAL FLUSH BOLTS

WOOD DOOR APPLICATION

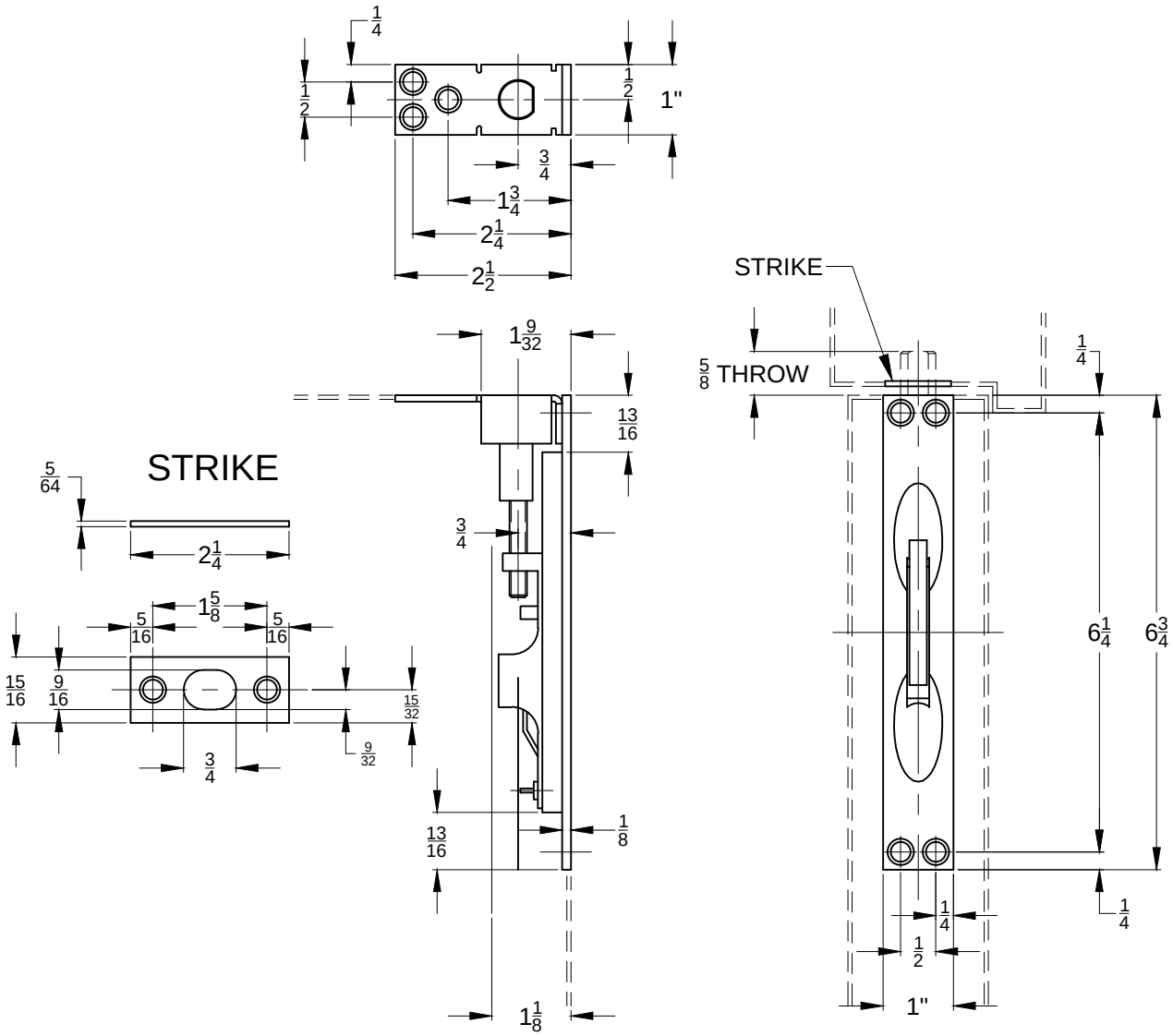

MINIMUM CLEARANCE REQUIRED

SCREW DETAILS: BOLT HOUSING - (5) 8 - 32 x 1-1/2" F.H. COMB SCREW
STRIKE - (2) 8 - 32 x 11/16" F.H. COMB SCREW

® www.abhmfg.com
E-mail: abhinfo@abhmfg.com
Architectural Builders Hardware Mfg., Inc.
1222 Ardmore Ave., Itasca, IL 60143
630.875.9900; FAX 800.9FAXABH (932.9224)

ABH is a minority owned and operated manufacturing company.

© 2004 ABH Mfg., Inc.
printed in USA

1857-00.DWG

1857

ISSUED 06-04-04