E0519 POCKET PIVOT

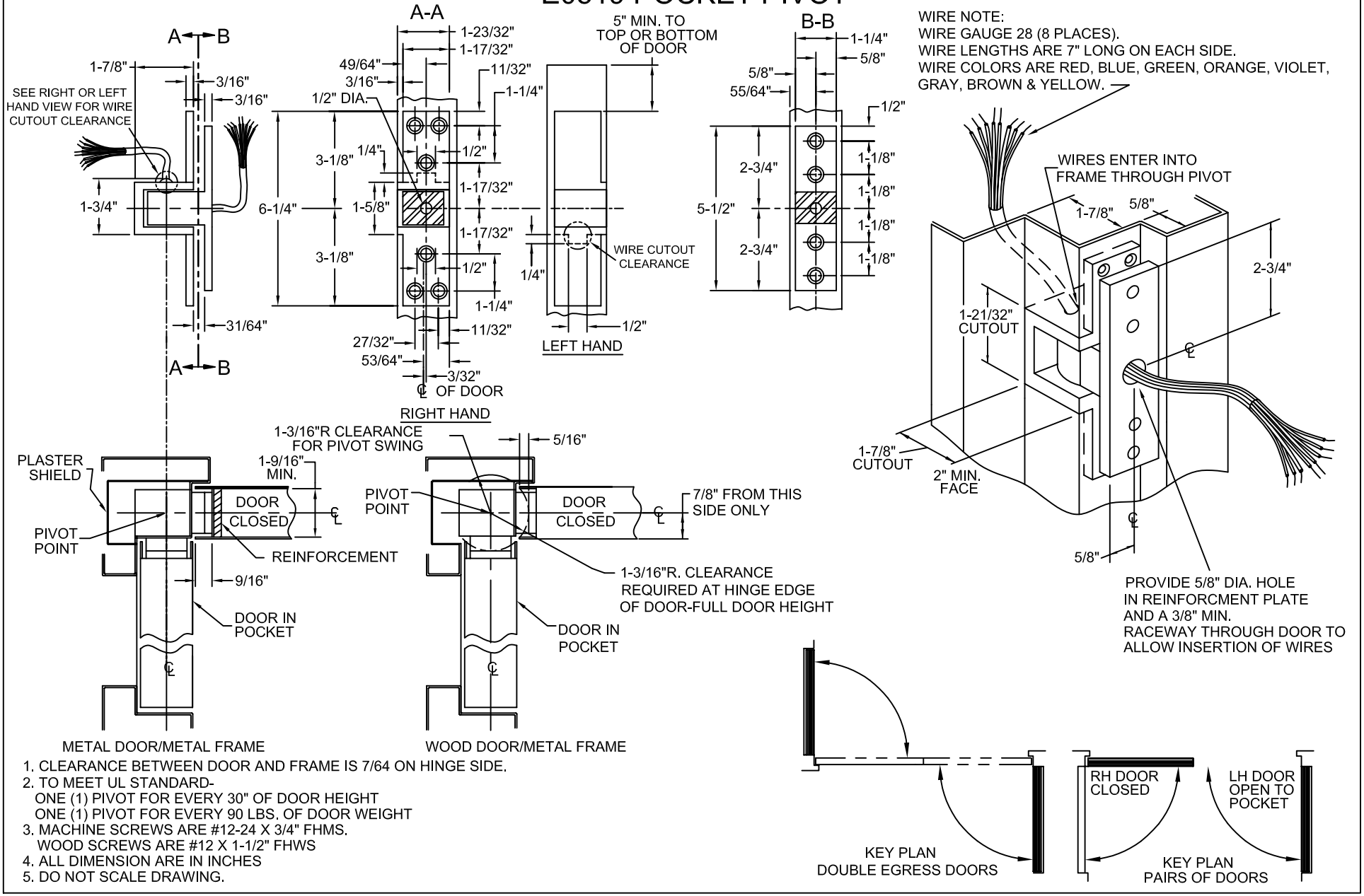

1. CLEARANCE BETWEEN DOOR AND FRAME IS 7/64 ON HINGE SIDE.
2. TO MEET UL STANDARD-
   ONE (1) PIVOT FOR EVERY 30" OF DOOR HEIGHT
   ONE (1) PIVOT FOR EVERY 90 LBS. OF DOOR WEIGHT
3. MACHINE SCREWS ARE #12-24 X 3/4" FHMS.
   WOOD SCREWS ARE #12 X 1-1/2" FHWS
4. ALL DIMENSION ARE IN INCHES
5. DO NOT SCALE DRAWING.

E0519-03.DWG

www.abhmfg.com
E-mail: abhinfo@abhmfg.com
Architectural Builders Hardware Mfg., Inc.
1222 Ardmore Ave., Itasca, IL 60143
630.875.9900; FAX 800.9FAXABH (932.9224)

© 2007 ABH Mfg., Inc.
printed in USA

E0519

REVISED 05-01-07