HINGE MODEL:
A505 - WITH EDGE GUARD

STANDARD HINGE LENGTH CONVERSION CHART
A 78.75" ACTUAL LENGTH = AN 6'8" DOOR OPENING

SCREW DETAIL	
QTY.	DESCRIPTION
38	10-24x7/8" PHILLIPS FLAT HEAD UNDERCUT SELF-DRILLING MACHINE SCREW
38	#10x1.250" PHILLIPS FLAT HEAD UNDERCUT SHEET METAL SCREW

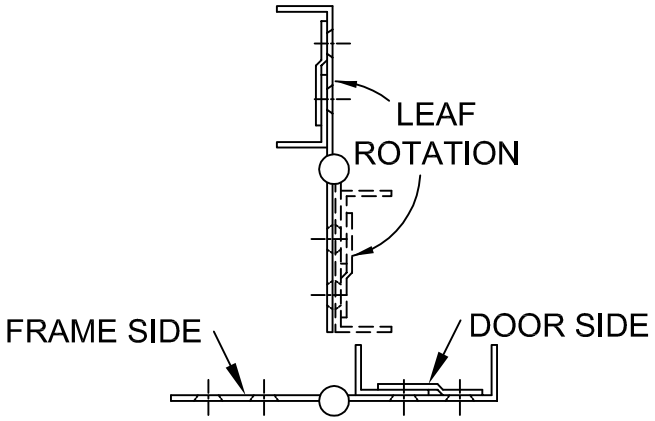

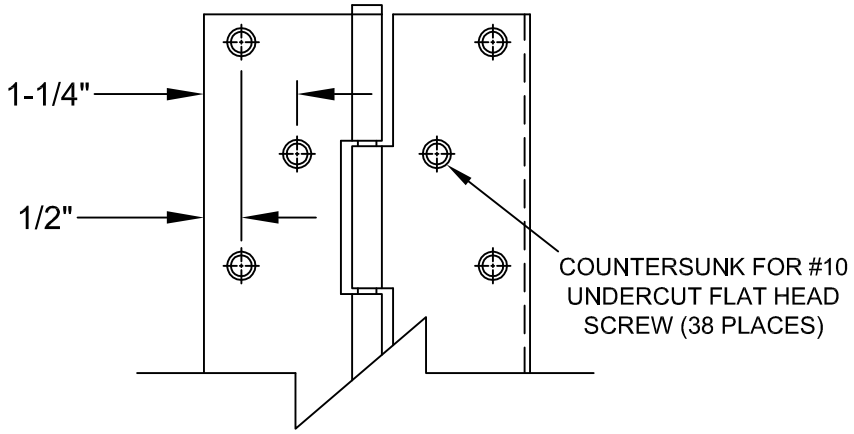

Closed Position

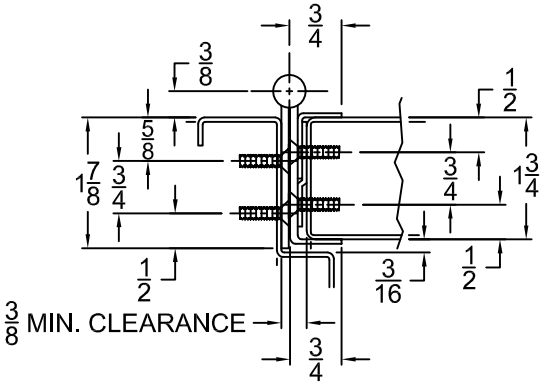

90° Open Position

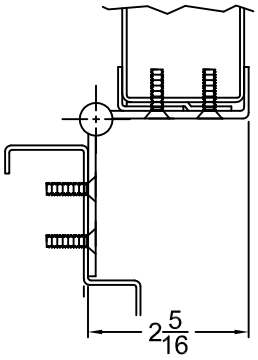

78.750 (6'8")

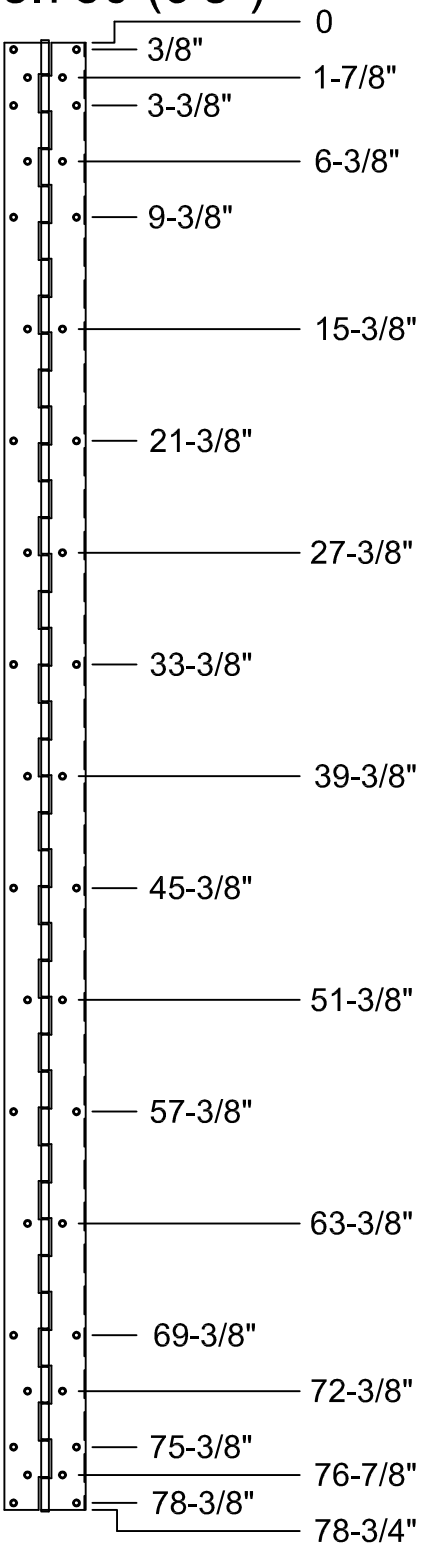

A505-78.750-05.DWG

www.abhmfg.com
E-mail: abhinfo@abhmfg.com
Architectural Builders Hardware Mfg., Inc.
1222 Ardmore Ave., Itasca, IL 60143
630.875.9900; FAX 800.9FAXABH (932.9224)

© 2011 ABH Mfg., Inc.
printed in USA

A505-78.750

REVISED 12-22-11