HINGE MODEL:
A500 - FULL CONCEALED

STANDARD HINGE LENGTH CONVERSION CHART

A 83.125" ACTUAL LENGTH = AN 7' DOOR OPENING

SCREW DETAIL	
QTY.	DESCRIPTION
42	10-24x7/8" PHILLIPS FLAT HEAD UNDERCUT SELF-DRILLING MACHINE SCREW
42	#10x1.250" PHILLIPS FLAT HEAD UNDERCUT SHEET METAL SCREW

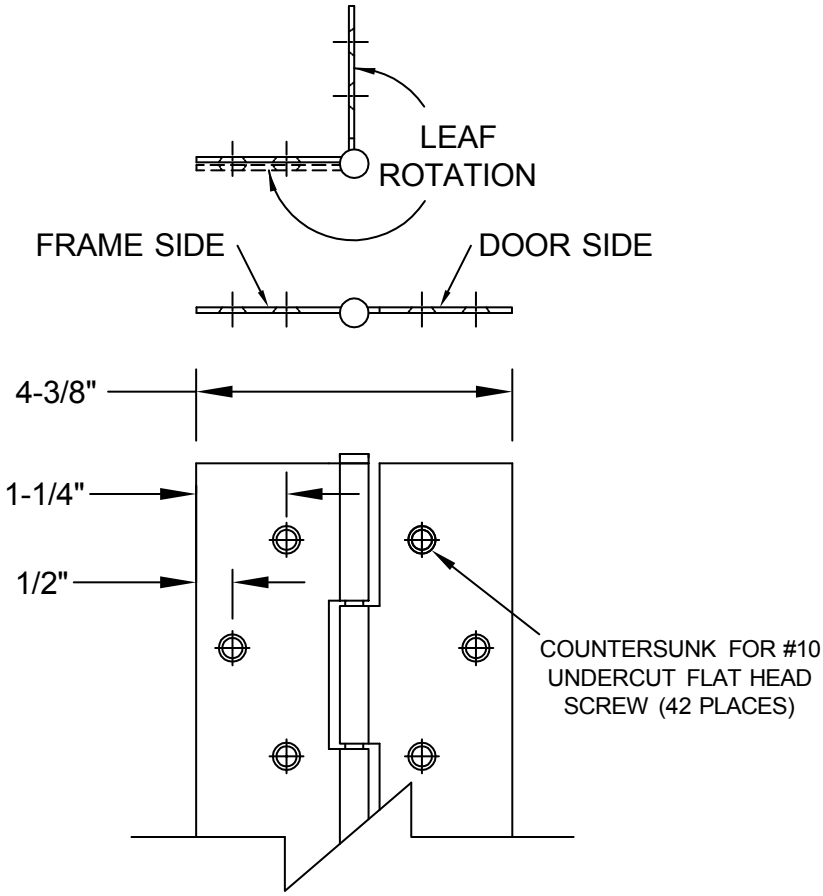

90° Open Position

Closed Position

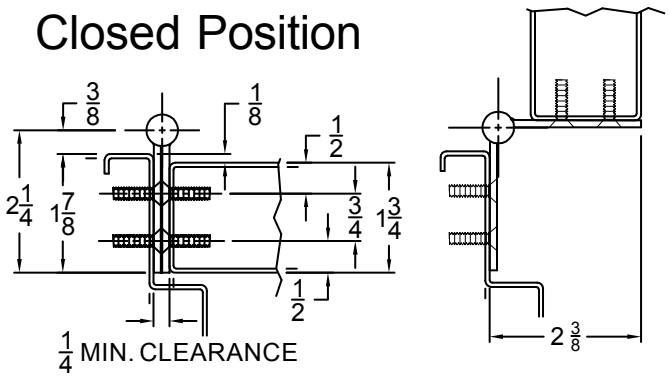

83.125" (7')

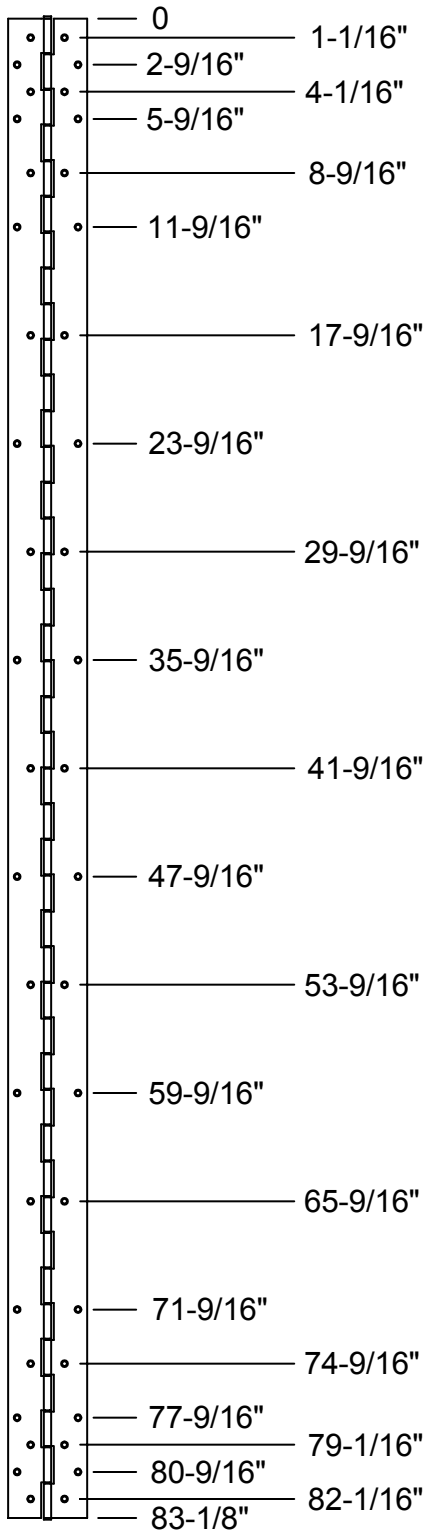

A500-83-125-04.DWG

www.abhmfg.com
E-mail: abhinfo@abhmfg.com
Architectural Builders Hardware Mfg., Inc.
1222 Ardmore Ave., Itasca, IL 60143
630.875.9900; FAX 800.9FAXABH (932.9224)

© 2010 ABH Mfg., Inc.
printed in USA

A500-83.125

REVISED 03-29-10