A270HD/A270LL
120" LONG

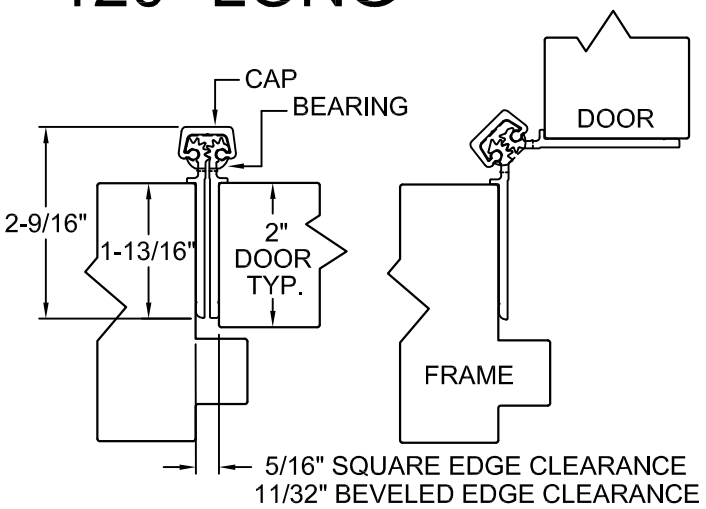

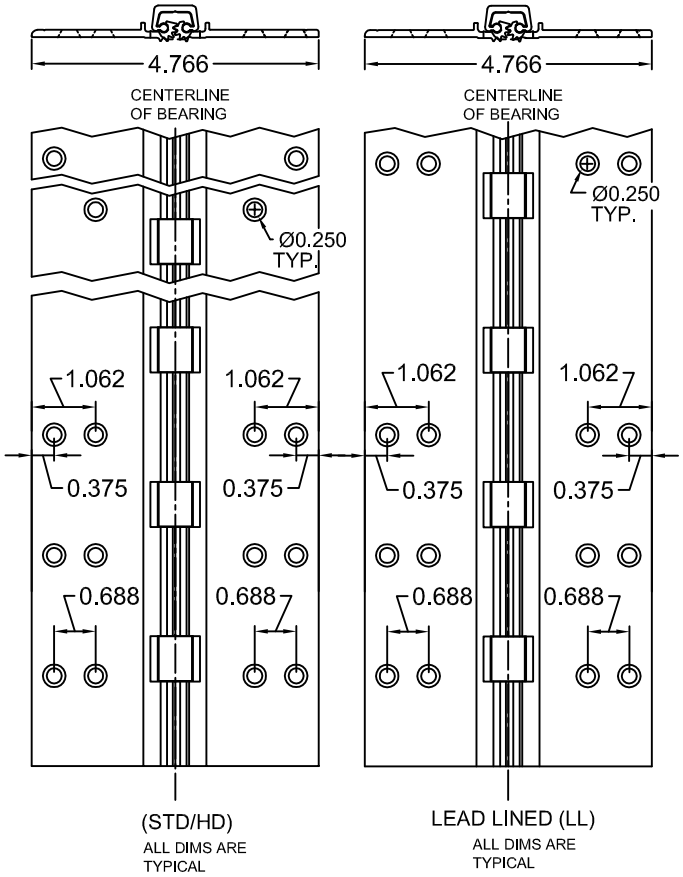

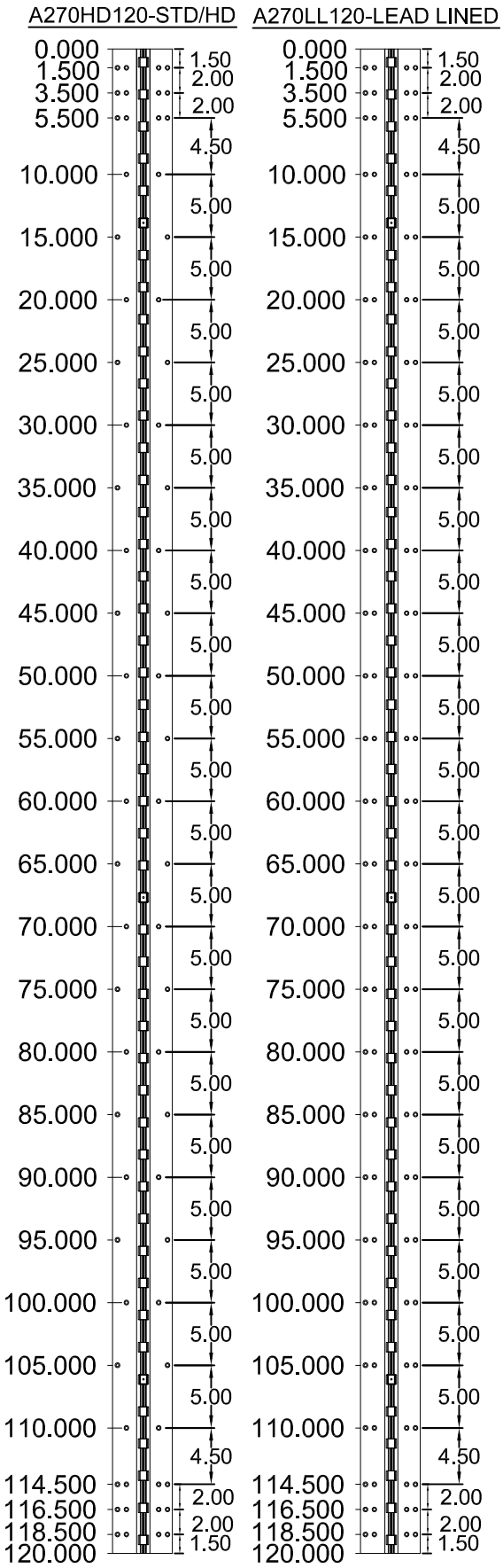

ALL DIMS ARE TO CENTERLINE OF HOLES

SCREW DETAIL			
	MODEL		DESCRIPTION
	STD/HD QTY.	LL QTY.	
FRAME	33	54	12-24 X 7/8" PH. F.H. UNDERCUT SELF DRILLING THREAD FORMING TEK SCREW
DOOR	33	54	12-24 X 7/8" PH. F.H. UNDERCUT SELF DRILLING THREAD FORMING TEK SCREW

A270-120-04.DWG

A270-120

REVISED 10-28-10