A260HD/A260LL
95" LONG

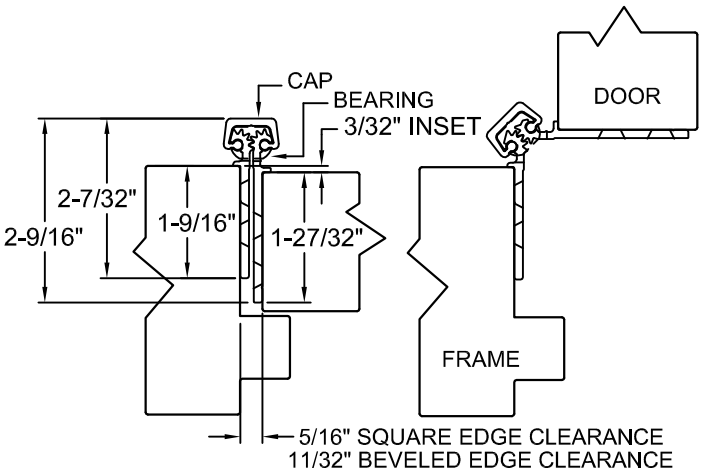

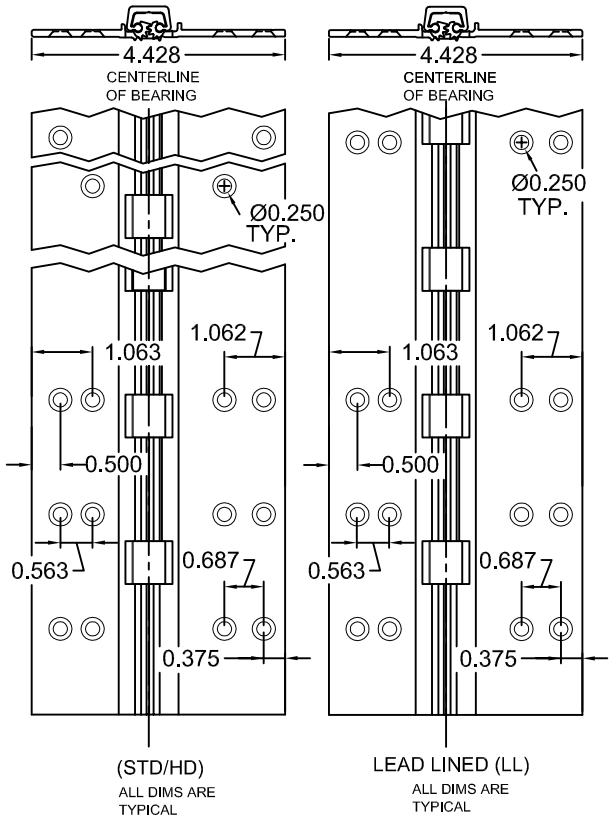

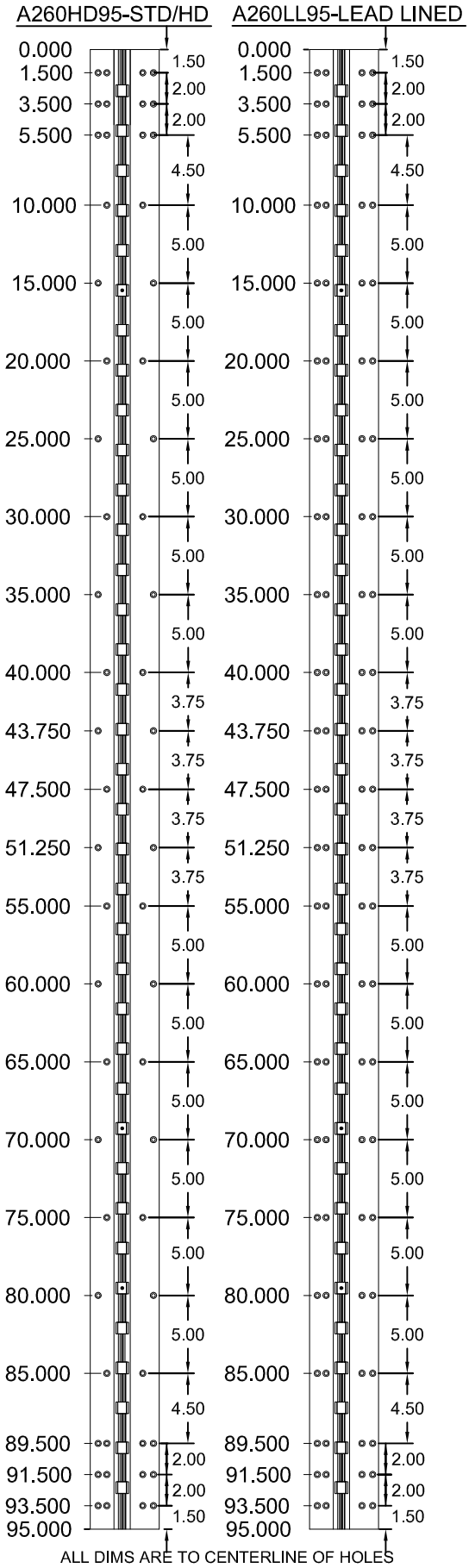

SCREW DETAIL			
	MODEL		DESCRIPTION
	STD/HD QTY.	LL QTY.	
FRAME	29	46	12-24 X 7/8" PH. F.H. UNDERCUT SELF DRILLING THREAD FORMING TEK SCREW
DOOR	29	46	12-24 X 7/8" PH. F.H. UNDERCUT SELF DRILLING THREAD FORMING TEK SCREW

A260-95-03.DWG

A260-95

REVISED 10-28-10