# A130HD
# 120" LONG

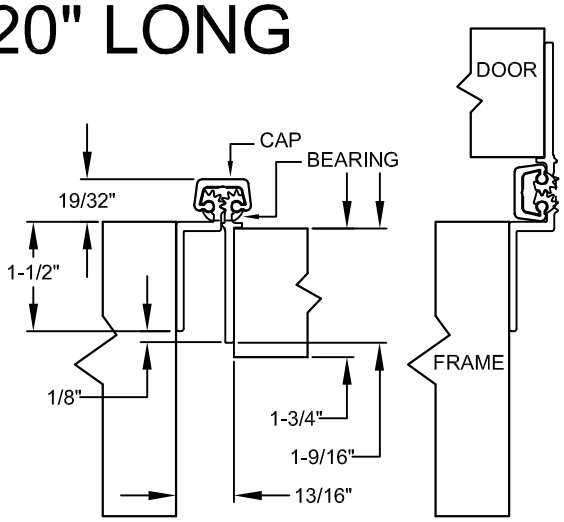


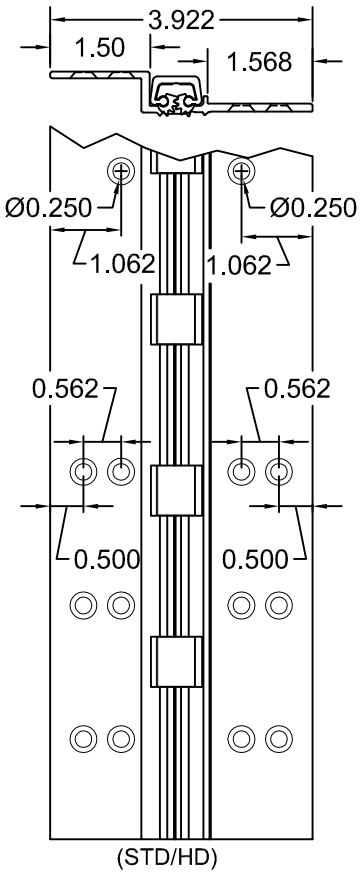


(STD/HD)

ALL DIMS ARE TYPICAL

A130HD120-STD/HD

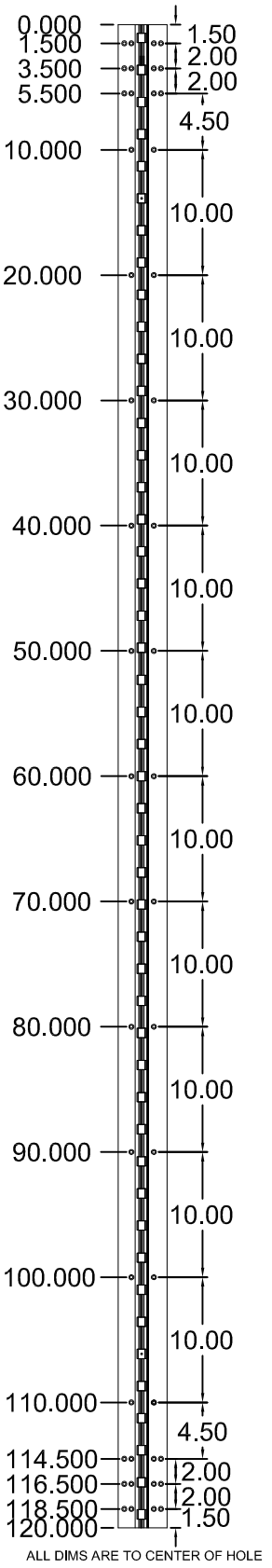


ALL DIMS ARE TO CENTER OF HOLE

| SCREW DETAIL | | |
|---|---|---|
| | QTY. | DESCRIPTION |
| FRAME | 23 | 12-24 X 7/8" PH. F.H. UNDERCUT SELF DRILLING THREAD FORMING TEK SCREW |
| DOOR | 23 | 12-24 X 7/8" PH. F.H. UNDERCUT SELF DRILLING THREAD FORMING TEK SCREW |

A130HD-120-03.DWG

# A130HD120

REVISED 10-28-10