HINGE MODEL:

A503 - SURFACE MOUNTED DOOR LEAF

STANDARD HINGE LENGTH CONVERSION CHART

A 118.750" ACTUAL LENGTH = AN 10'0" DOOR OPENING

SCREW DETAIL	
QTY.	DESCRIPTION
27	10-24x7/8" PHILLIPS FLAT HEAD UNDERCUT SELF-DRILLING MACHINE SCREW
17	1/4-20x0.750" PHILLIPS PAN HEAD SELF-DRILLING MACHINE SCREW
27	#10x1.250" PHILLIPS FLAT HEAD UNDERCUT SHEET METAL SCREW
7	COVER CLIP

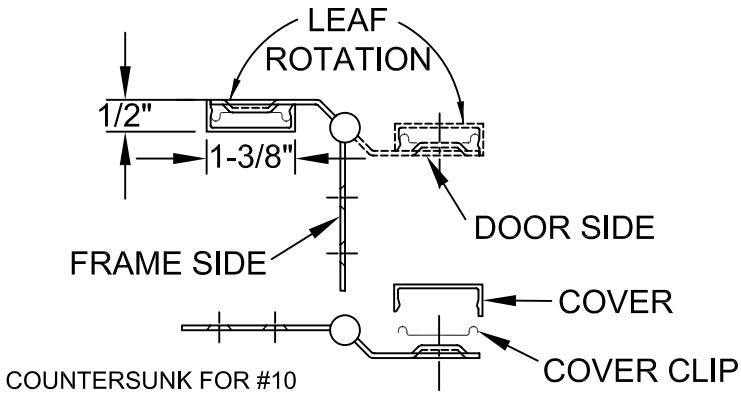

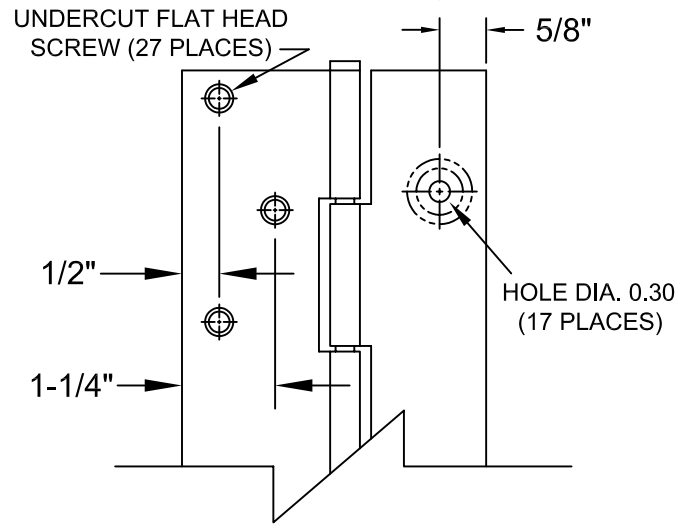

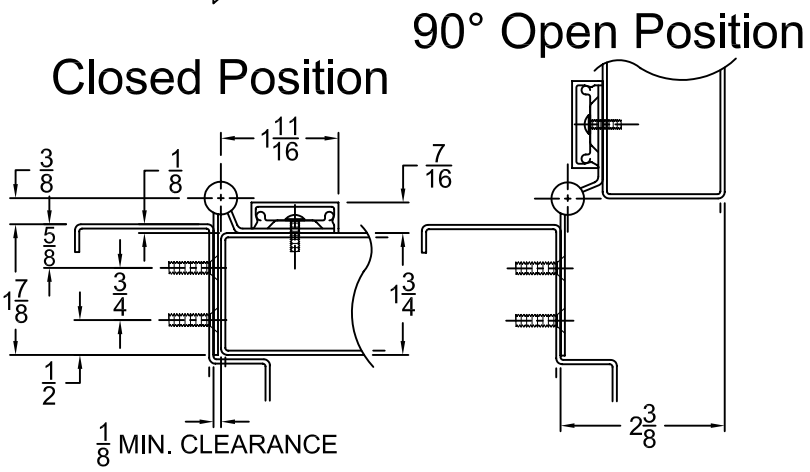

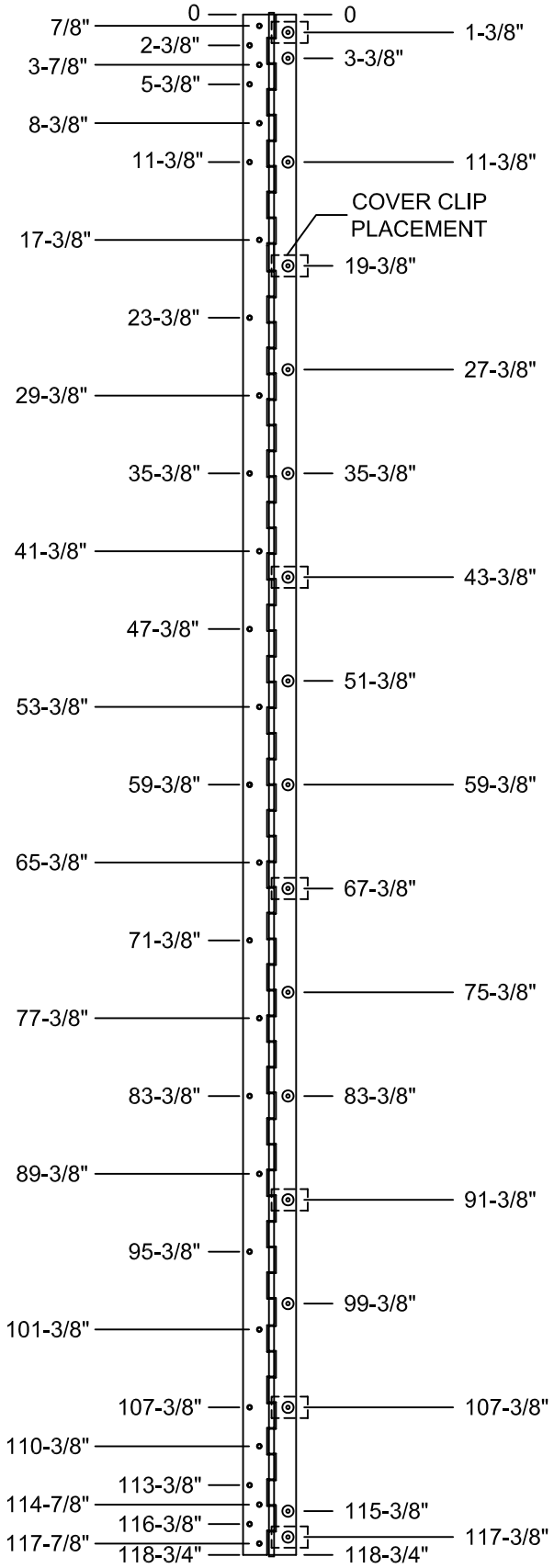

A503-118.125-04.DWG

www.abhmfg.com
E-mail: abhinfo@abhmfg.com
Architectural Builders Hardware Mfg., Inc.
1222 Ardmore Ave., Itasca, IL 60143
630.875.9900; FAX 800.9FAXABH (932.9224)

© 2006 ABH Mfg., Inc.
printed in USA

A503-118.750

REVISED 05-25-06